PASCO®

Instruction Manual with
Experiment Guide and
Teacher's Notes
012-10204A

Human Arm Model

ME-6807

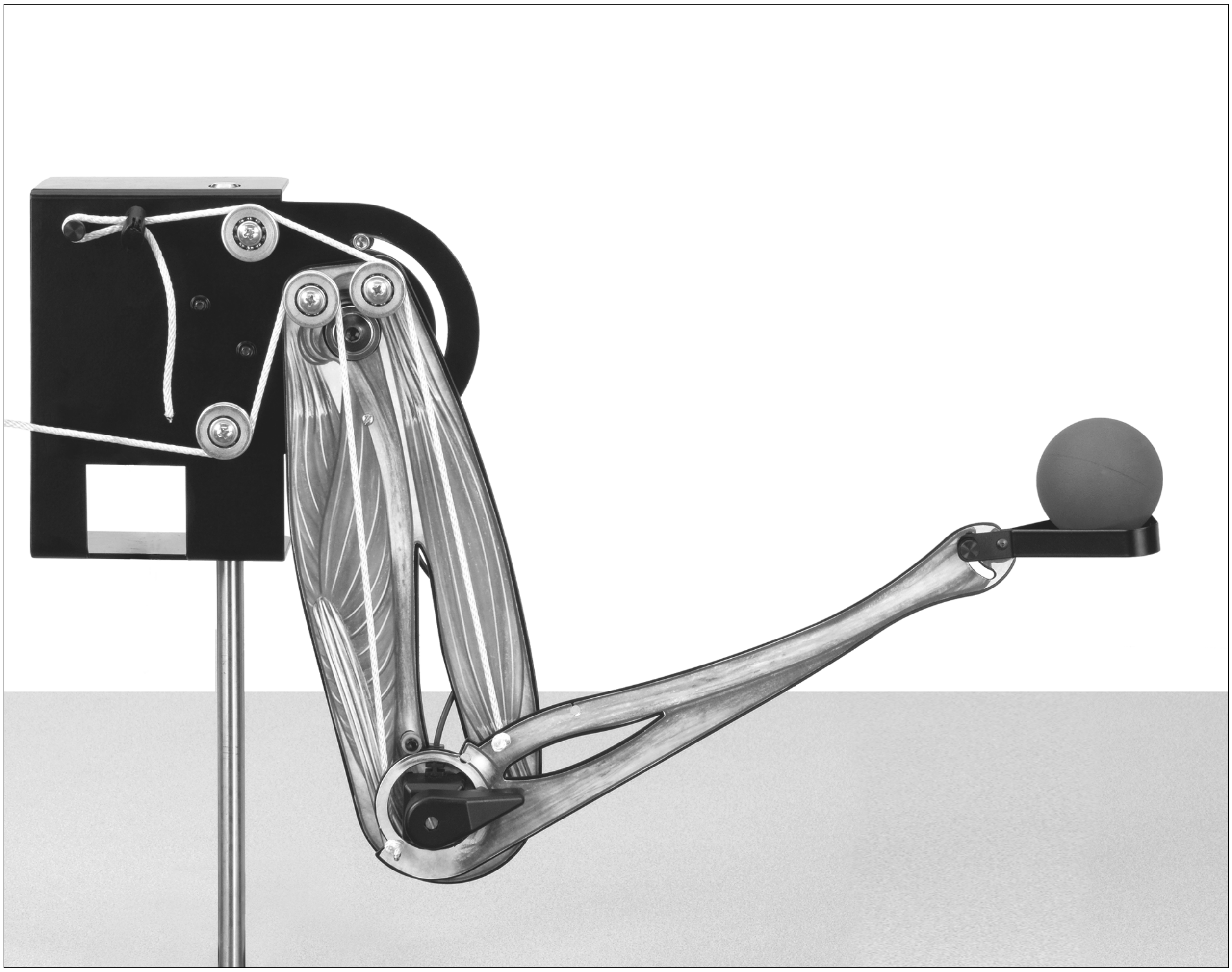

800-772-8700

www.pasco.com

Human Arm Model

ME-6807

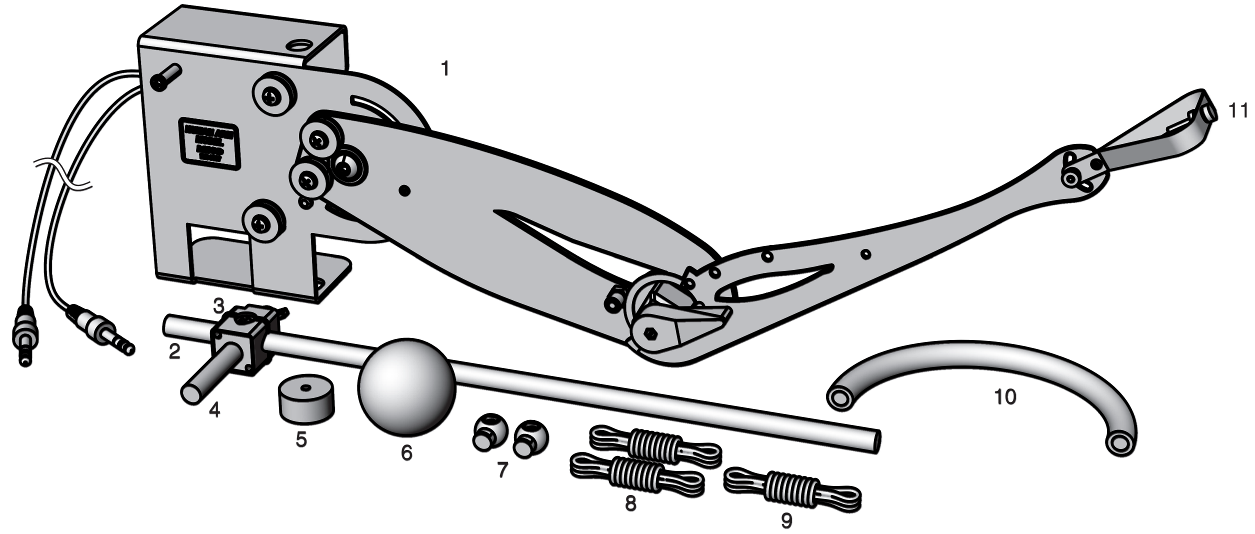

Included with ME-6807	Replacement Part Number
1. Human Arm Model	ME-6807
2. 45 cm Rod	ME-8736
3. Sensor-mounting Clamp	ME-6808 (Human Arm Model Spares Kit)
4. Sensor-mounting Stud	
5. 100 g Mass	
6. Hollow Rubber Ball, 57 mm diameter	
7. Cord Locks, 2 pieces	
8. Cord, 2 90 cm pieces	
9. Elastic Cord, 60 cm	
10. Tubing for replacing elbow stop pad, 29 cm	
11. Thumbscrew and nut for attaching mass	

Also included with PS-2611	Part Number
Angle Sensor	PS-2139

Other recommended equipment	
Angle Sensor	PS-2139
Force Sensors (2 recommended)	PS-2104 *or* PS-2189
C-clamp	SE-7286 (6-pack)
or	
Large Table Clamp	ME-9472

Introduction

The Human Arm Model simulates the muscles and motion of an actual human arm. Changes in position are measured at the shoulder and elbow using the two built-in potentiometers. Cords representing the biceps and triceps muscles attach to the arm. Students can pull the cords to make the arm move and use force sensors to measure the forces exerted by the muscles.

This manual includes:

- instructions for setting up the arm model (starting on page 5),
- various experiments (page 9),
- demonstrations of complex movements (page 25), and
- teacher's notes and sample data for the experiments (page 28).

Parts of the Arm Model

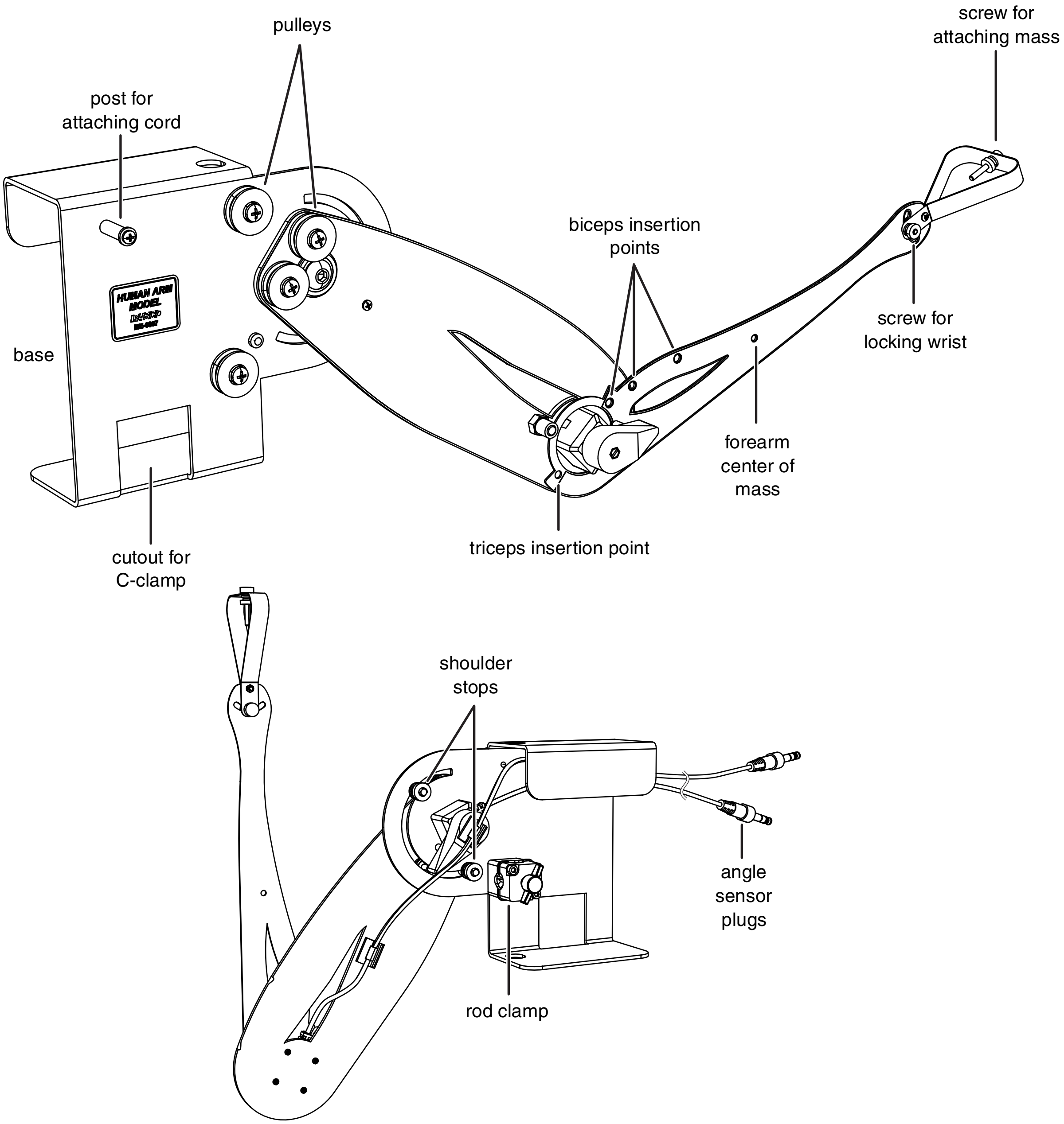

Figure 1: Parts of the arm model

Clamping the Arm Model to a Lab Bench

The base of the arm model must be clamped to a stable object such as a lab bench. This can be done with a C-clamp or with a model ME-9472 Large Table Clamp. Depending on how you will use the model, you can clamp the base horizontally, vertically, or upside down.

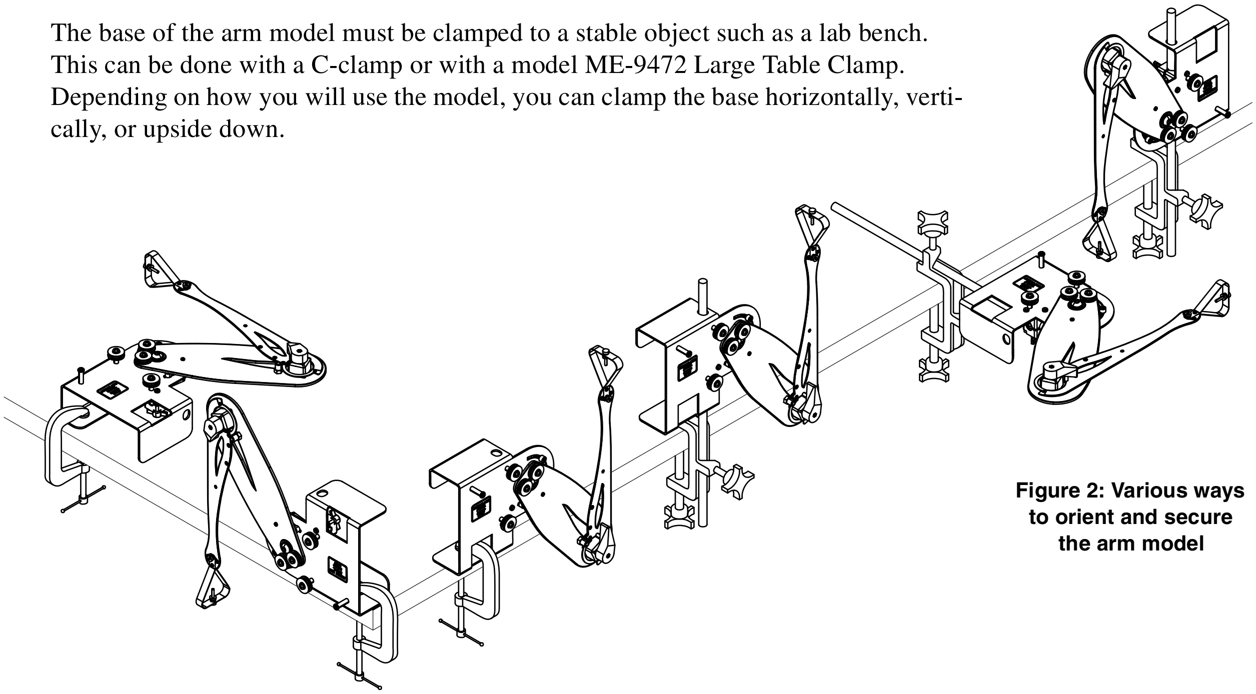

Figure 2: Various ways to orient and secure the arm model

Locking or Limiting Shoulder Movement

The shoulder can be locked at an angle, or its movement can be limited, using the adjustable shoulder stops (see Figure 3). Loosen one of the shoulder stop nuts, slide the stop to the desired position, and tighten the nut. Repeat for the other shoulder stop.

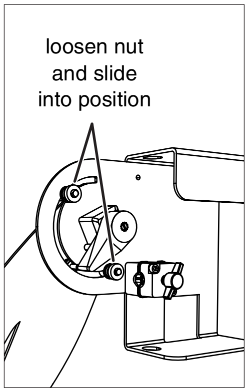

Figure 3: Adjustable shoulder stops

Adjusting the Wrist Angle

Loosen the wrist nut, change the position of the hand, and tighten the nut (Figure 4a).

Attaching the Mass

Use the included screw and nut to attach the 100 g mass to the hand (Figure 4b).

Holding a Ball

Adjust the angles of the shoulder, elbow, and wrist to make the hand horizontal. Place the ball on the hand (Figure 4c).

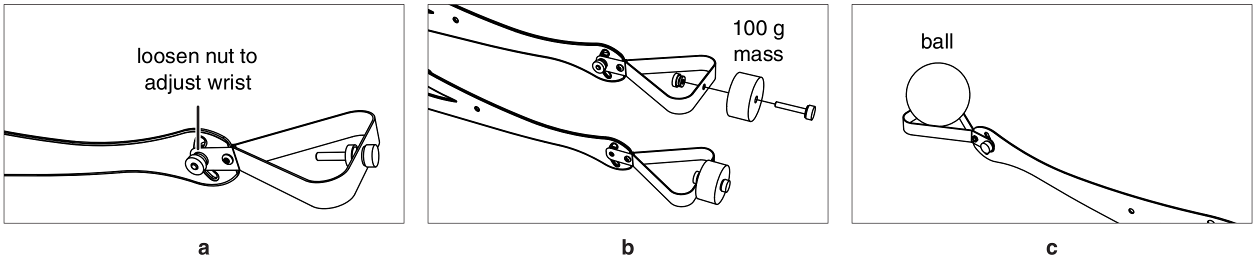

Figure 4: The hand

Attaching Cords to the Arm Model

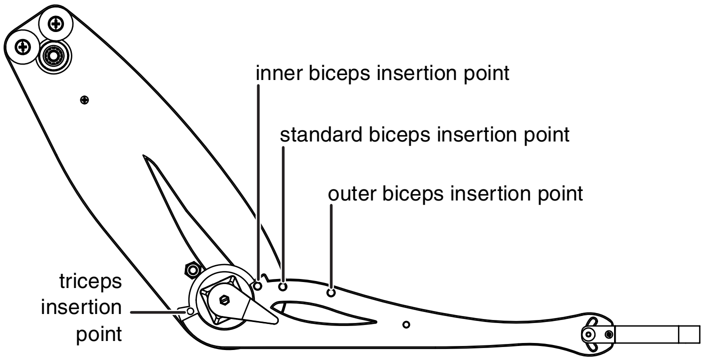

Figure 5: Muscle insertion points

Cords are used to represent the muscles of the upper arm. Depending on how you will use the model, you can attach one or two cords, use standard cords or elastic cords, and run the cords over and under the pulleys in various ways.

The biceps cord can be attached at the standard muscle insertion point, representing a human arm, or at one of the other two insertion points, for more or less leverage (Figure 5).

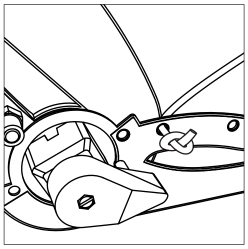

Figure 6: Cord attached to insertion point

1. Tie a knot near the end of a cord and thread the other end through one of the insertion point holes. Pull the cord through until the knot stops against the hole (Figure 6).

2. Run the cord over and under the pulleys in the desired configuration. (For examples, see the experiments and demonstrations starting on page 9.)

3. Use one of the include cord locks to make a loop in the free end of the cord. Place the loop over a post or a force sensor hook. Adjust the length of the cord. Push the cord lock against the post or hook and tie a knot against the cord lock to prevent it from slipping (Figure 7).

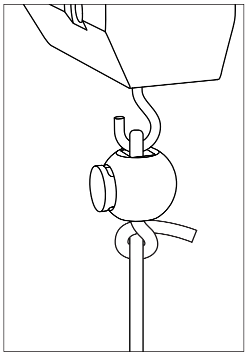

Figure 7: Cord attached to force sensor with cord lock

How Angles are Measured

The angle sensor determines the shoulder and elbow angles from the resistance of the potentiometers built into the joints. Figure 8 shows how the angles are measured.

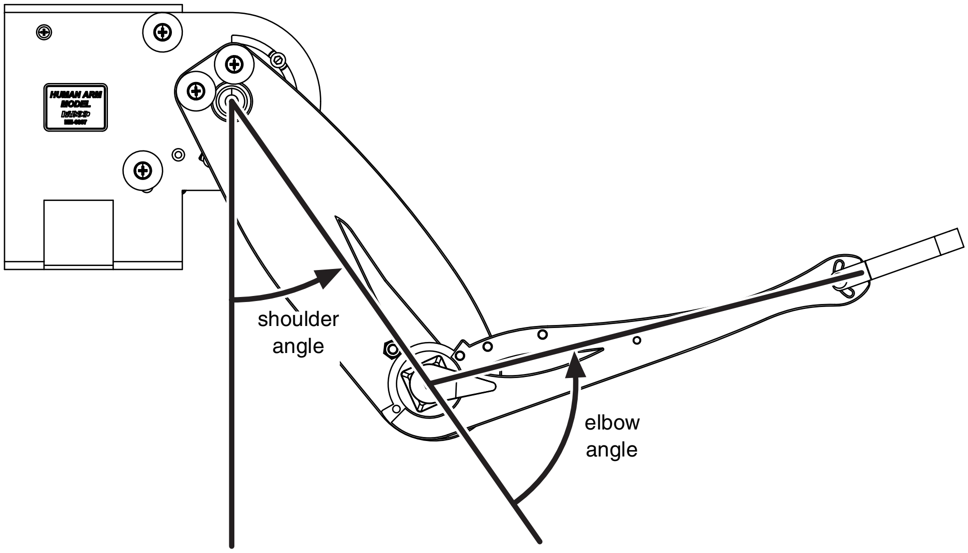

Figure 8: How angles are measured

Using Sensors with the Arm Model

Note: For more information about angle sensors, force sensors, and interfaces, see the instructions supplied with those devices.

Angle Sensor

1. Connect the cable from the elbow to Channel 1 of the angle sensor.
2. Connect the cable from the shoulder to Channel 2 of the angle sensor.
3. Connect the angle sensor to your PASPORT interface.
4. If you are using a computer, connect the PASPORT interface to it and start DataStudio.

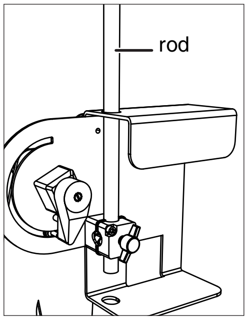

Figure 9: Rod clamped in base

Force Sensor

1. Connect a force sensor to the same PASPORT interface as the angle sensor (if it is a multi-port interface) or to a separate interface.
2. Use one of the included cord locks to make a loop in the biceps or triceps cord and attach it to force sensor's hook (see "Attaching Cords to the Arm Model" on page 6).
3. Clamp the included 45 cm rod to the base of the arm model (Figure 9).
4. Secure the included sensor clamp to the rod. Screw the sensor stud into the clamp (Figure 10).
5. Mount the force sensor on the stud (Figure 11).

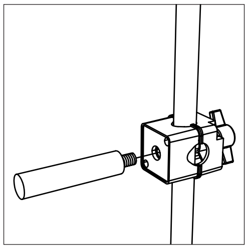

Figure 10: Sensor stud and clamp

Repeat steps 1 and 2 to add a second force sensor.

For some measurements, the second force sensor is used to apply a load to the model's hand. You can hook the force sensor directly onto the hand, or, for more flexibility, tie a loop of string to the hand.

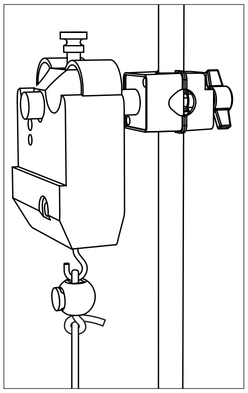

Figure 11: Force sensor

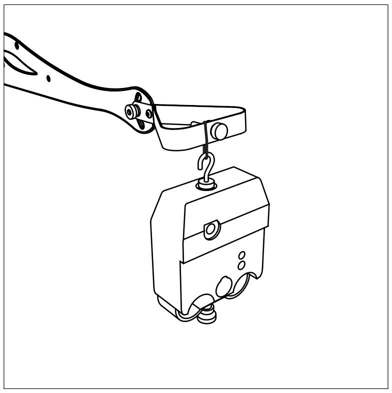

Figure 12: Force sensor attached to hand with string

Replacing the Elbow-stop Pad

The post that limits the travel of the elbow is padded with plastic tubing. If the plastic becomes worn, complete these steps to replace it.

1. Use a sharp knife to remove the old pad.

2. Cut a 10 mm piece from tubing included with the arm model.

3. Press the piece of tubing onto the post (Figure 13).

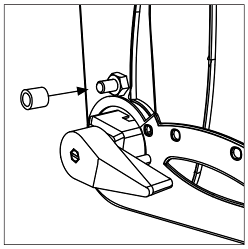

Figure 13: Elbow-stop pad replacement

Replacement Parts

The Human Arm Model Spares Kit (PASCO part ME-6808) is available to replace lost or worn parts. It contains:

- Cord, inelastic (120 cm)
- Elastic cord (60 cm)
- Cord locks (10)
- Balls (3)
- 100 g masses (2)
- Screws and nuts for attaching mass to hand (2 of each)
- Sensor-mounting clamps (2)
- Sensor-mounting studs (2)
- T-screws for rod clamp (4)
- Shoulder stops (2)
- Bumper that contacts shoulder stops (1)
- Screws and nuts for locking wrist (2 of each)
- Tubing for replacing elbow stop pad (30 cm)

About the Experiments

Experiments are presented on the following pages as examples of ways to set up and use the arm model. In many of these experiments, students are asked to perform an action with their own arms and make predictions before reproducing the action on the arm model. Teacher's notes and sample data can be found on page 28.

Experiment 1: Biceps Force versus Perpendicular Load

Required Parts of Human Arm Model

Arm

Cord (1 piece)

45 cm rod

Sensor-mounting clamp and stud

Other Required Equipment

2 Force Sensors	PS-2104 *or* PS-2189
C-clamp	SE-7286 (6-pack)

Introduction

Hold your arm in front of you with your elbow bent at 90°. Now have your partner pull your hand to try to straighten your elbow. Resist the load force so that your elbow remains at 90°.

Predictions

1. Which muscle (the biceps or triceps) did you use to resist this load? How do you know?
2. Was the muscle force greater than, less than, or equal to the load force applied to your hand?
3. If you partner pulls your hand with a force of 1 N, guess how much muscle force is needed to keep your elbow at 90°.

Set-up

1. Clamp the arm model horizontally as illustrated.
2. Clamp the rod to the base of the model as illustrated. Use the sensor clamp and stud to attach a force sensor to the rod.
3. Lock the shoulder at 0°.
4. Attach a cord as illustrated. Adjust the length of the cord so that the elbow is held at about 90°.
5. Connect two force sensors to your interface. The second force sensor will be held in your hand and apply the load force to the model's hand.
6. Set the sampling rate of both force sensors to 20 Hz.
7. Prepare a graph to plot biceps force versus load force.

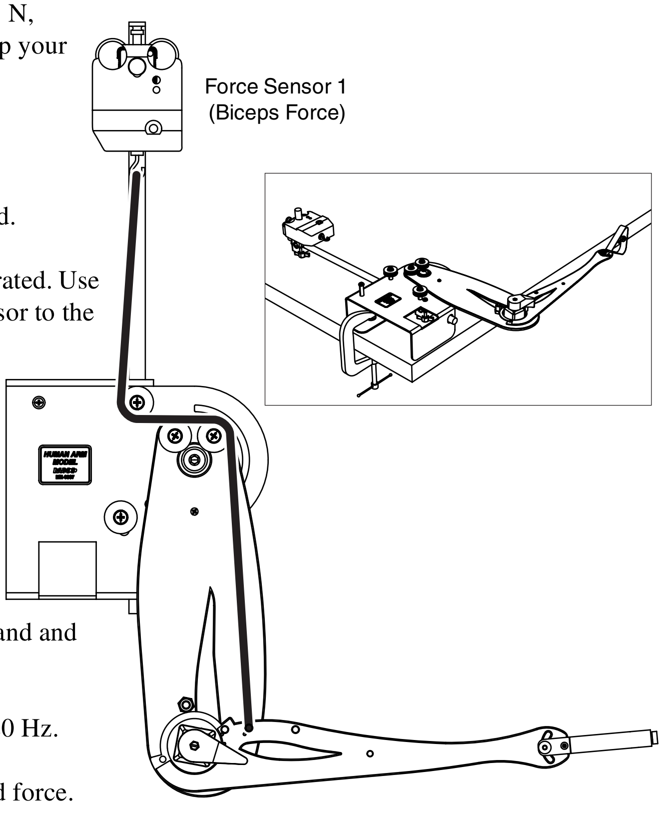

Procedure

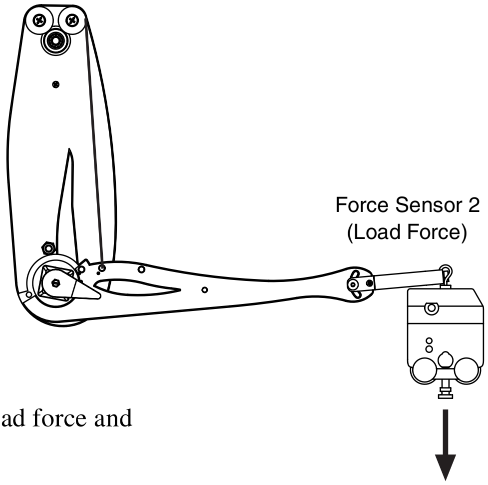

1. Start data collection.

2. Hook the second force sensor onto to the model's hand and pull in the direction indicated in the illustration. Slowly increase the force while watching the graph.

3. When the load force reaches about 2 N, stop data collection.

Analysis

1. Using words and numbers, explain the relationship between load force and biceps force.

2. Were your predictions accurate? Explain.

Further Analysis

1. Draw a free-body diagram showing all forces (in the plane of rotation) acting on the forearm.

2. What is the net force on the forearm?

3. What is the net torque?

Further Study

1. Repeat the experiment with the elbow at a different angles, but keep the load force perpendicular to the forearm. How does the ratio of biceps force to load force change for elbow angles greater and less than 90°?

2. Repeat the experiment with the cord attached at the other two biceps insertion points.

Experiment 2: Biceps Force versus Weight

Required Parts of Human Arm Model	
Arm	
Cord (1 piece)	
45 cm rod	
Sensor-mounting clamp and stud	
Other Required Equipment	
2 Force Sensors	PS-2104 *or* PS-2189
C-clamp	SE-7286 (6-pack)

Introduction

Let your arm hang vertically at your side. While keeping your upper arm vertical, bend your elbow at 90° so that your forearm is horizontal. Hold your palm up. Have your partner place a mass in your hand, but don't let your arm move.

Predictions

1. If the mass in your hand is 100 g (so its weight is 0.98 N), how much biceps force is needed to keep your elbow at 90°? (Assume that your triceps is relaxed.)
2. If you double the mass in your hand (so the load force doubles), does the biceps force double?
3. If you remove the mass from your hand, does the biceps force go to zero? Explain your answer.

Set-up

1. Clamp the arm model vertically as illustrated.
2. Clamp the rod to the base of the model as illustrated. Use the sensor clamp and stud to attach a force sensor to the rod.
3. Lock the shoulder at 0°.
4. Attach a cord as illustrated. Adjust the length of the cord so that the elbow is held at about 90°.
5. Connect two force sensors to your interface. The second force sensor will be held in your hand and apply the load force to the model's hand.
6. Set the sampling rate of both force sensors to 20 Hz.
7. Prepare a graph to plot biceps force versus load force.

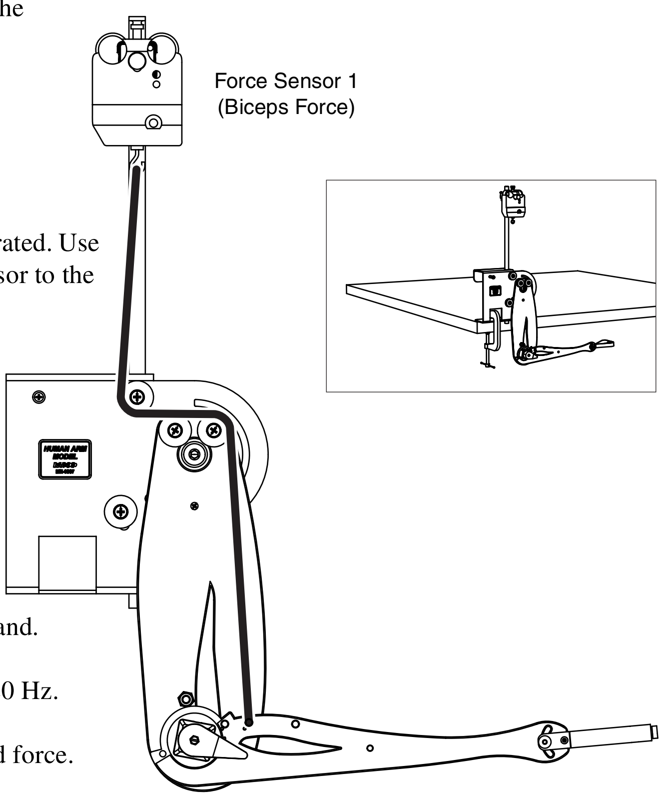

Procedure

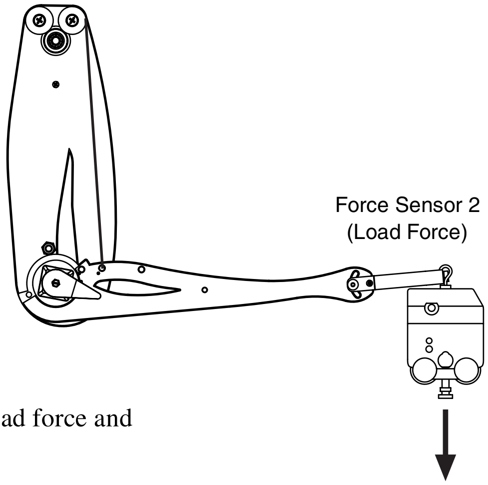

1. Start data collection.
2. Hook the second force sensor onto to the model's hand and pull down to simulate a weight held in the hand. Slowly increase the force while watching the graph.
3. When the load force reaches about 2 N, stop data collection.

Analysis

1. Using words and numbers, explain the relationship between load force and biceps force.
2. Were your predictions accurate? Explain.

Further Analysis

1. Draw a free-body diagram showing all forces (in the plane of rotation) acting on the forearm.
2. What is the net force on the forearm?
3. What is the net torque?

Further Study

Repeat the experiment with the elbow at different angles. The applied force should always be straight down to simulate the weight of a mass held in the hand. How does the relationship between biceps force and load force change for elbow angles greater and less than 90°?

Variation

Instead of using a force sensor to apply the load force, hang a known mass from the hand. Add mass incrementally while measuring biceps force.

Experiment 3: Triceps Force versus Perpendicular Load

Required Parts of Human Arm Model
Arm
Cord (1 piece)
45 cm rod
Sensor-mounting clamp and stud

Other Required Equipment	
2 Force Sensors	PS-2104 *or* PS-2189
C-clamp	SE-7286 (6-pack)

Introduction

Hold your arm in front of you with your elbow bent at 90°. Now have your partner push your hand toward you to try to bend your elbow further. Resist the load force so that your elbow remains bent at 90°.

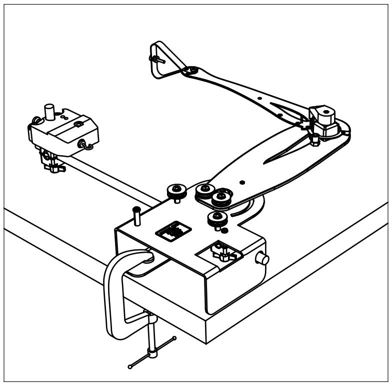

Predictions

1. Which muscle (the biceps or triceps) do you use to resist this load? How do you know?
2. Is the muscle force greater, less than, or equal to the load force applied to your hand?
3. If you partner pushes your hand with a force of 1 N, how much muscle force is needed to keep your elbow at 90°?

Set-up

1. Clamp the arm model horizontally as illustrated.
2. Clamp the rod to the base of the model as illustrated. Use the sensor clamp and stud to attach a force sensor to the rod.
3. Lock the shoulder at 90°.
4. Attach a cord as illustrated. Adjust the length of the cord so that the elbow will be held at about 90°.
5. Connect two force sensors to your interface. The second force sensor will be held in your hand and apply the load force to the model's hand.
6. Set the sampling rate of both force sensors to 20 Hz.
7. Prepare a graph to plot triceps force versus load force.

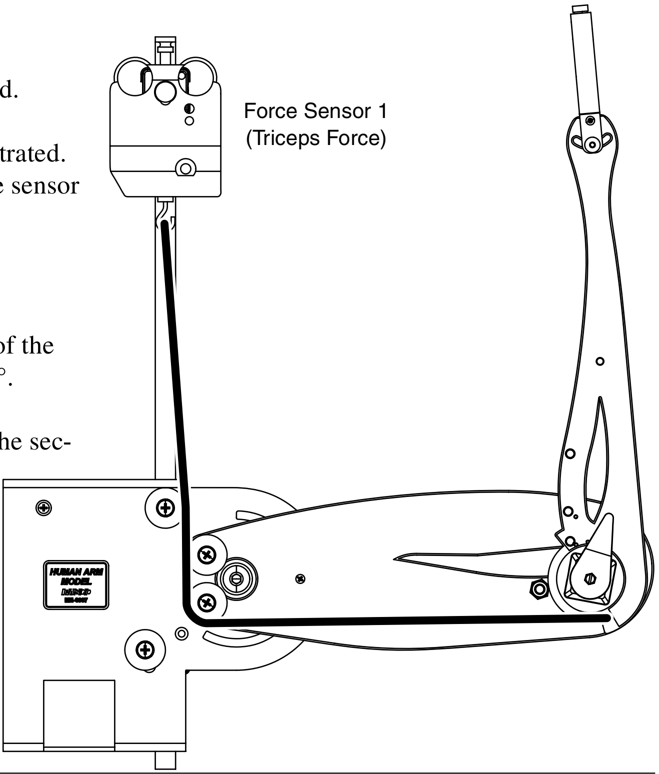

Procedure

1. Start data collection.
2. Hook the second force sensor onto to the model's hand and pull in the direction indicated in the illustration. Slowly increase the force while watching the graph.
3. When the load force reaches about 2 N, stop data collection.

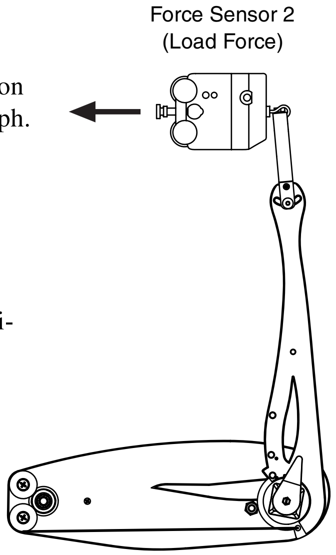

Analysis

1. Using words and numbers, explain the relationship between load force and triceps force.
2. Were your predictions accurate? Explain.

Further Analysis

1. Draw a free-body diagram showing all forces (in the plane of rotation) acting on the forearm.
2. What is the net force on the forearm?
3. What is the net torque?

Experiment 4: Biceps Curl

Required Parts of Human Arm Model
Arm
Cord (1 piece)
100 g mass

Other Required Equipment	
Angle Sensor	PS-2139
Force Sensor	PS-2104 *or* PS-2189
C-clamp	SE-7286 (6-pack)

Part A

Introduction

Let your arm hang vertically at your side. Hold a mass in your hand. Without moving your upper arm, flex your elbow to lift the mass.

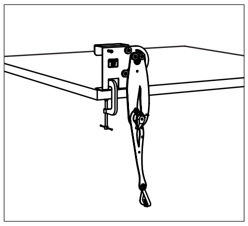

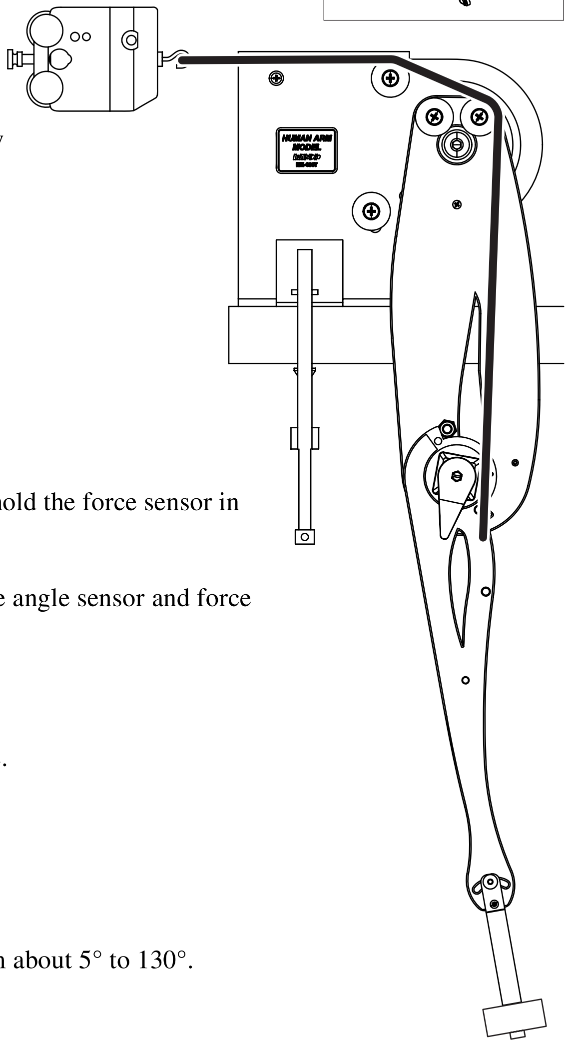

Predictions

1. As you lift the mass, does your biceps force increase or decrease?
2. Sketch your prediction of the biceps force versus elbow angle graph.

Set-up

1. Install the 100 g mass on the model's hand.
2. Clamp the arm model vertically as illustrated.
3. Lock the shoulder at 0°.
4. Attach a cord and force sensor as illustrated. You will hold the force sensor in your hand and pull to make the model's elbow flex.
5. Connect the arm model to the angle sensor. Connect the angle sensor and force sensor to your interface.
6. Set the sampling rate of the force sensor to 20 Hz.
7. Prepare a graph to plot biceps force versus elbow angle.

Procedure

1. Start data collection.
2. Pull with the force sensor to slowly flex the elbow from about 5° to 130°.

3. Stop data collection.

Analysis

1. Is the graph linear?

2. As the elbow flexes does the biceps force increase or decrease?

Part B

Introduction

The motion studied in this part is similar to that of the last part, but the upper arm is held at an angle rather than vertical.

Hold a mass in your hand. Rest your elbow on the back of a chair so that your upper arm is at about 45 degrees from vertical. Starting with your elbow straight, flex your elbow to lift the mass.

Predictions

1. As you lift the mass, does your biceps force increase or decrease?

2. Sketch your prediction of the biceps force versus elbow angle graph.

Set-up

1. Reposition the shoulder and lock it at 45°.

2. Hold force sensor in the position illustrated.

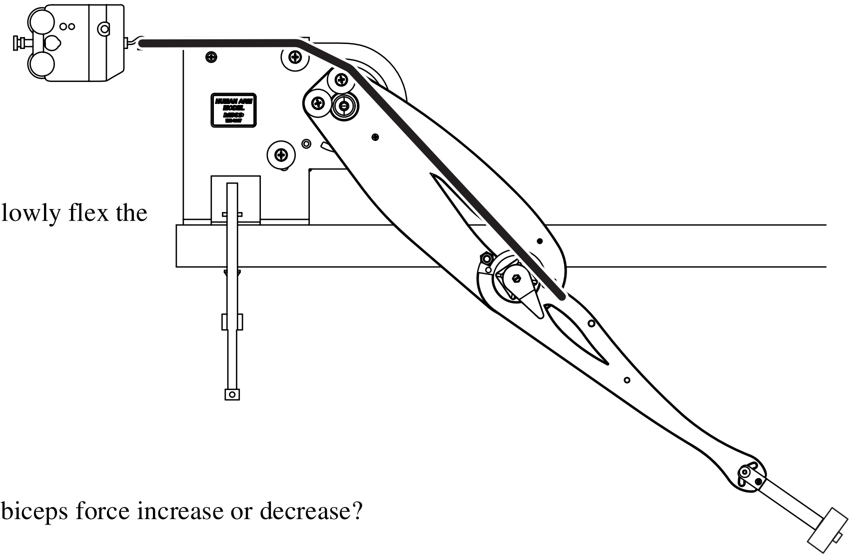

Procedure

1. Start data collection.

2. Pull with the force sensor to slowly flex the elbow from about 5° to 130°.

3. Stop data collection.

Analysis

1. Is the graph linear?

2. As the elbow flexes does the biceps force increase or decrease?

Further Study

Find a shoulder angle for which the biceps force is nearly constant as the elbow flexes from 10° to 130°.

Experiment 5: Biceps Force versus Shoulder Angle, Constant Elbow Angle

Required Parts of Human Arm Model
Arm
Cord (1 piece)
100 g mass

Other Required Equipment	
Angle Sensor	PS-2139
Force Sensor	PS-2104 *or* PS-2189
2 C-clamps	SE-7286 (6-pack)

Introduction

Hold a mass in your hand with your elbow at 90° so that your upper arm hangs vertically and your forearm is horizontal. While keeping your elbow bent at 90°, lift the mass by rotating your entire arm forward about your shoulder.

Predictions

1. As you lift the mass, does your biceps force increase or decrease?
2. Sketch your prediction of the biceps force versus shoulder angle graph.

Set-up

1. Install the 100 g mass on the model's hand.
2. Clamp the arm model vertically as illustrated.
3. Use a C-clamp to attach the force sensor to the upper arm.
4. Attach a short cord between the forearm and the force sensor as illustrated. Adjust the length of the cord (or the clamped position of the force sensor) so that the elbow is bent at 90°.
5. Connect the arm model to the angle sensor. Connect the angle sensor and force sensor to your interface.
6. Set the sampling rate of the force sensor to 20 Hz.

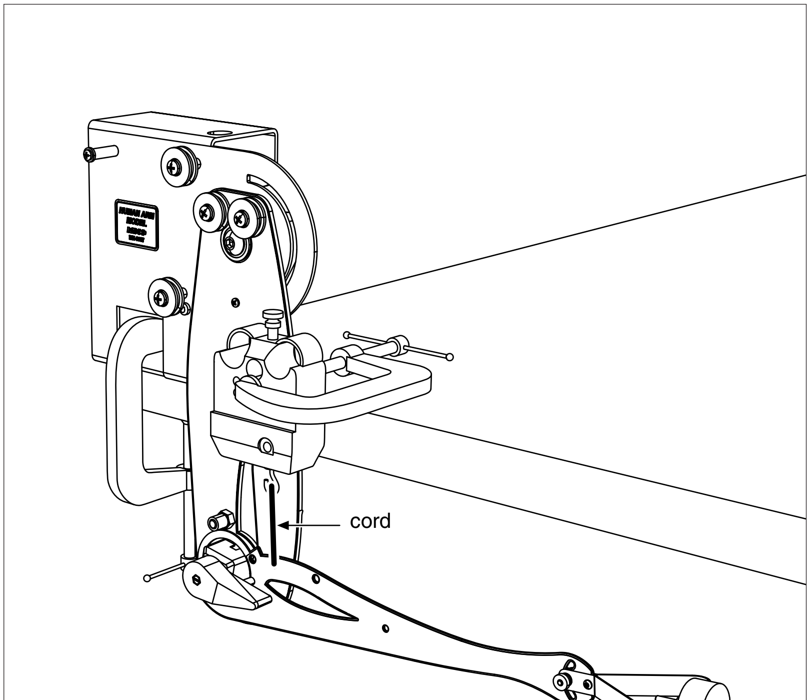

7. Prepare a graph to plot biceps force versus shoulder angle.

Procedure

1. Start data collection.
2. Push the upper arm to rotate the shoulder from 0 degrees to about 85 degrees. (Don’t touch the forearm or force sensor as you do this.)
3. Stop data collection.

Analysis

1. Is the graph linear?
2. As the arm lifts the mass (increasing the shoulder angle) does the biceps force increase or decrease?

Experiment 6: Biceps Force versus Elbow Angle, Constant Forearm Orientation

Required Parts of Human Arm Model

Arm

Cord (1 piece)

100 g mass

45 cm rod

Sensor-mounting clamp and stud

Other Required Equipment	
Angle Sensor	PS-2139
Force Sensor	PS-2104 *or* PS-2189
C-clamp	SE-7286 (6-pack)

Introduction

Hold a mass in your hand with your elbow at 90° so that your upper arm hangs vertically and your forearm is horizontal. While keeping your forearm horizontal, extend your arm forward as if you are handing the mass to someone.

Predictions

1. As you push the mass forward, does your elbow flex or extend?
2. Does your biceps force increase or decrease?
3. Sketch your prediction of the biceps force versus elbow angle graph.

Set-up

1. Install the 100 g mass on the model's hand.
2. Clamp the arm model vertically as illustrated.
3. Use rods and clamps to attach a force sensor to the base of the model.
4. Attach a cord as illustrated. Adjust the length of the cord so that the elbow is at 90° when the shoulder is at 0°. (With this cord arrangement, the forearm will remain approximately horizontal as the shoulder rotates forward.)
5. Connect the arm model to the angle sensor. Connect the angle sensor and force sensor to your interface.
6. Set the sampling rate of the force sensor to 20 Hz.

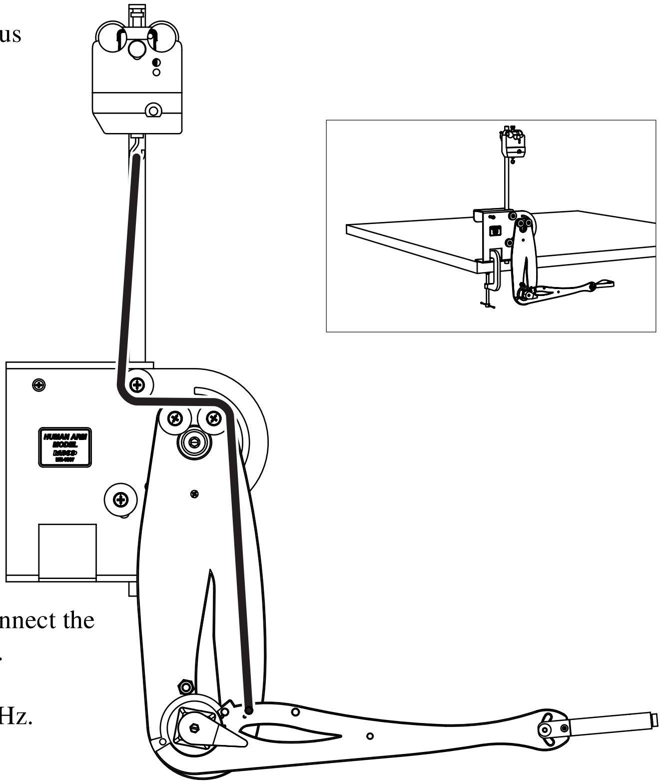

7. Prepare a graph to plot biceps force versus elbow angle.

Procedure

1. Start data collection.

2. Push the upper arm to rotate the shoulder from 0 degrees to about 85 degrees. (Don’t touch the forearm or force sensor as you do this.) The elbow will automatically extend.

3. Stop data collection.

Analysis

1. As the arm pushes the mass forward, does the elbow angle increase or decrease?

2. Does the biceps force increase or decrease as the arm pushes the mass forward? (Note that the extending motion of the arm is represented by *right-to-left* movement on the graph.)

Experiment 7: Triceps Extension

Required Parts of Human Arm Model	
Arm	
Cord (1 piece)	
100 g mass	

Other Required Equipment	
Angle Sensor	PS-2139
Force Sensor	PS-2104 *or* PS-2189
C-clamp	SE-7286 (6-pack)

Part A

Introduction

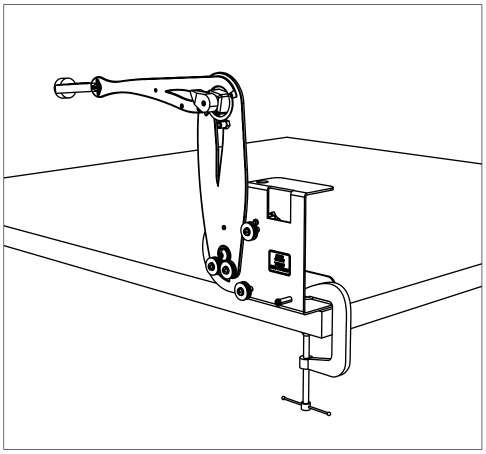

Hold a mass in your hand. Stretch your arm straight up. Bend your elbow at 90° so that your forearm is horizontal and your hand is close to the back of your head. While keeping your upper arm vertical, lift the mass by extending your elbow.

Predictions

1. As you lift the mass, does your triceps force increase or decrease?
2. Sketch your prediction of the triceps force versus elbow angle graph.

Set-up

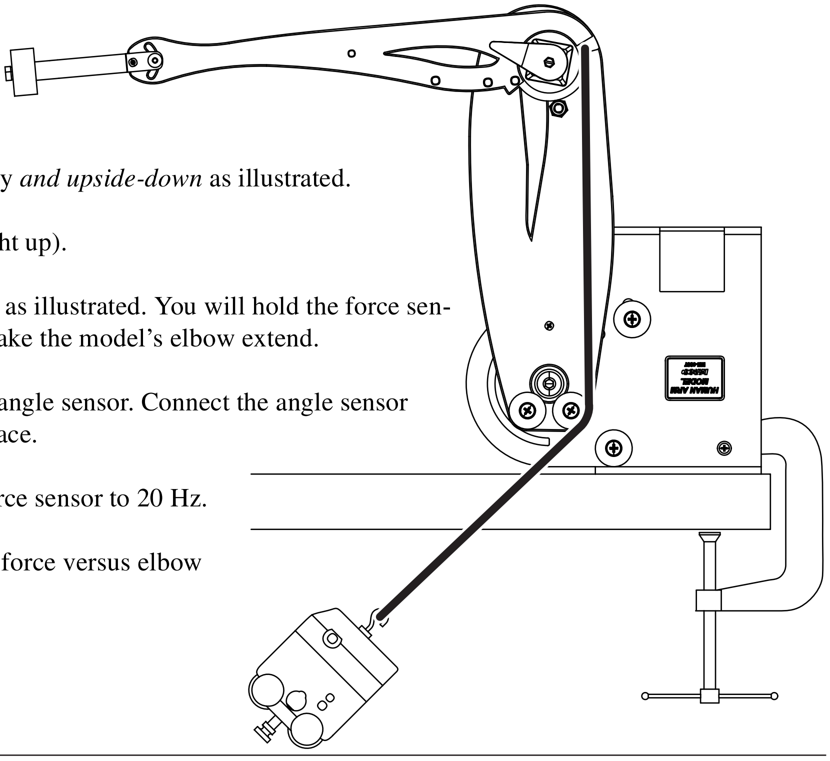

1. Install the 100 g mass on the model's hand.
2. Clamp the arm model vertically *and upside-down* as illustrated.
3. Lock the shoulder at 0° (straight up).
4. Attach a cord and force sensor as illustrated. You will hold the force sensor in your hand and pull to make the model's elbow extend.
5. Connect the arm model to the angle sensor. Connect the angle sensor and force sensor to your interface.
6. Set the sampling rate of the force sensor to 20 Hz.
7. Prepare a graph to plot triceps force versus elbow angle.

Procedure

1. Hold the forearm horizontal by pulling with the force sensor.

2. Start data collection.

3. Pull with the force sensor to slowly extend the elbow from about 90° to 10°.

4. Stop data collection.

Analysis

1. As the arm lifts the mass, does elbow angle increase or decrease?

2. Does the triceps force increase or decrease? (Note that the extending motion of the elbow is represented by *right-to-left* movement on the graph.)

Part B

Introduction

The motion studied in this part is similar to that of Part A, but the upper arm is held horizontally rather than vertically.

Hold a mass in your hand. Lean forward and rotate your shoulder *back* so that your upper arm is horizontal. Bend your elbow at 90 degrees so that your forearm hangs straight down. While keeping your upper arm horizontal, lift the mass by extending your elbow.

Predictions

1. As you lift the mass, does your triceps force increase or decrease?

2. Sketch your prediction of the triceps force versus elbow angle graph.

Set-up

1. Reposition the model's shoulder and lock it at 90°.

2. Hold force sensor in the position illustrated.

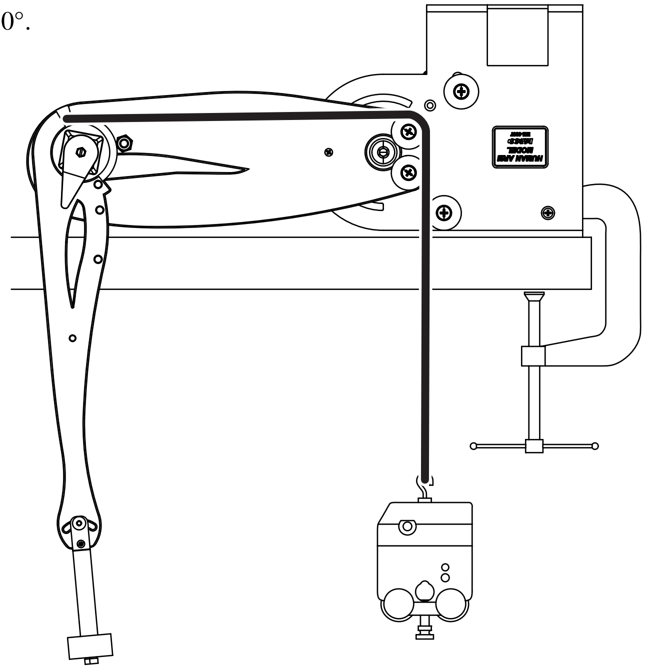

Procedure

1. Start data collection.

2. Pull with the force sensor to slowly extend the elbow from about 85° to 15°.

3. Stop data collection.

Analysis

Compare this graph to the graph from Part A.

Experiment 8: Rotational Inertia of the Forearm

Required Parts of Human Arm Model

Arm

Elastic cord

45 cm rod

Sensor-mounting clamp and stud

Other Required Equipment

Angle Sensor	PS-2139
Force Sensor	PS-2104 *or* PS-2189
C-clamp	SE-7286 (6-pack)

Introduction

In this experiment, you will use two different methods to estimate the rotational inertia of the forearm with the elbow as the axis of rotation. In part A, you will measure the period of oscillation. In part B, you will apply a known force and measure the resulting angular acceleration.

Part A

Set-up

1. Clamp the arm model upside down as illustrated.
2. Lock the shoulder in place with the upper arm approximately horizontal.
3. Set the sampling rate of the angle sensor to 200 Hz.
4. Prepare a graph to plot elbow angle versus time.

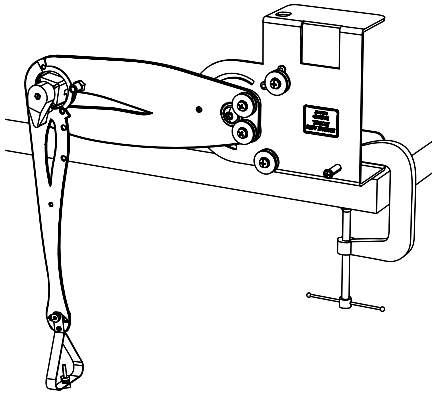

Procedure

1. Start data collection.
2. Displace the forearm and release it so that it oscillates freely.
3. After the forearm stops moving, stop data collection.

Analysis

The rotational inertia (about the axis of the elbow) is given by $I = T^2Mgd / (4\pi^2)$, where T is the period of oscillation (at small amplitudes), $M = 0.10$ kg is the mass of the forearm and hand, $g = 9.8$ m/s^2, and $d = 0.14$ m is the distance from the elbow to the center of mass (the center of mass is marked by a hole).

1. Determine T from the graph of elbow angle versus time.
2. Use this value of T to determine the rotational inertia.

Part B

Set-up

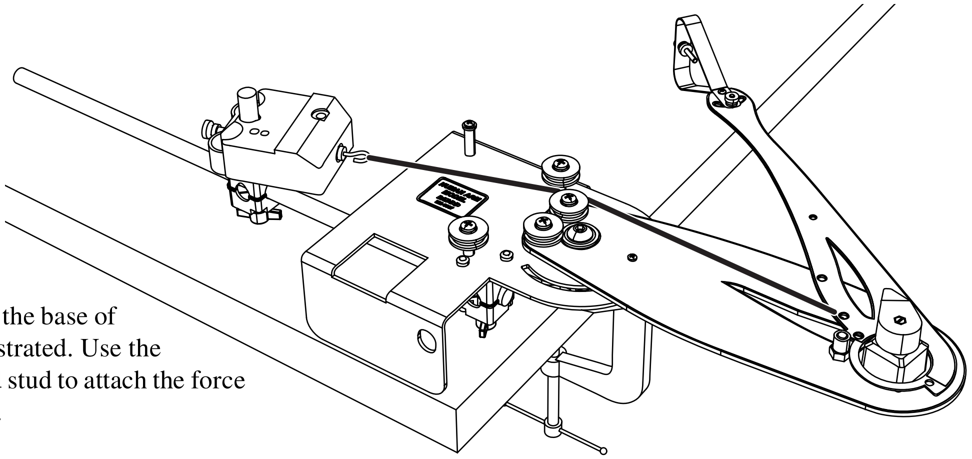

1. Clamp the arm model horizontally as illustrated.
2. Clamp the rod to the base of the model as illustrated. Use the sensor clamp and stud to attach the force sensor to the rod.
3. Attach an *elastic* cord as illustrated. Adjust the length of the cord so that the cord is under slight tension when the elbow is fully flexed.
4. Connect the force sensor to your interface.
5. Set the sampling rate of the force sensor to 200 Hz.
6. Prepare graphs to plot elbow angle, angular velocity (in rad/s), and biceps force versus time.
7. Set up the software so that you can see the angle reading as you take data.

Procedure

1. Start data collection.
2. Pull the forearm and hold it at 79°.
3. Release the forearm and let it move freely as the elastic cord contracts.
4. Stop data collection.

Analysis

For this analysis we will look at the angular acceleration when the elbow angle is about 90°. The rotational inertia is (approximately) $I = rF\ \ \alpha$, where $r = 0.045$ m is the distance from the elbow to the insertion point, F is the biceps force, and α is the rotational acceleration.

1. On the graph of angle versus time, identify the time span during which the elbow rotates from 80° to 100°.
2. Over the same time span, find the average force, F.
3. Over the same time span, fit a line to the angular velocity versus time plot. The slope of this line is α.
4. Use these values of F and α to determine the rotational inertia.

Demonstrations: Complex Movements

Required Parts of Human Arm Model
Arm
Cord (2 piece)
100 g mass
Ball
45 cm rod
Sensor-mounting clamp and stud

Other Required Equipment	
Angle Sensor	PS-2139
2 Force Sensors	PS-2104 *or* PS-2189
C-clamp	SE-7286 (6-pack)

Introduction

In the following demonstrations, the arm model is set up to perform motions involving simultaneous rotation of the shoulder and elbow. They are shown here with two force sensors; however they can also be done without sensors. Note that each cord in these arrangements makes both joints move and, therefore, represents combinations of muscles (not just the biceps or triceps).

"Curling Lift"

1. Set up the arm model with two force sensors as illustrated. The lower force sensor is attached to the rod clamped to the model's base. The upper force sensor will be held in your hand.

2. Pull the upper force sensor. Both shoulder and elbow rotate in the same direction to lift the hand.

3. Attach the 100 g mass to the hand and repeat to see how the additional load affects the muscle forces.

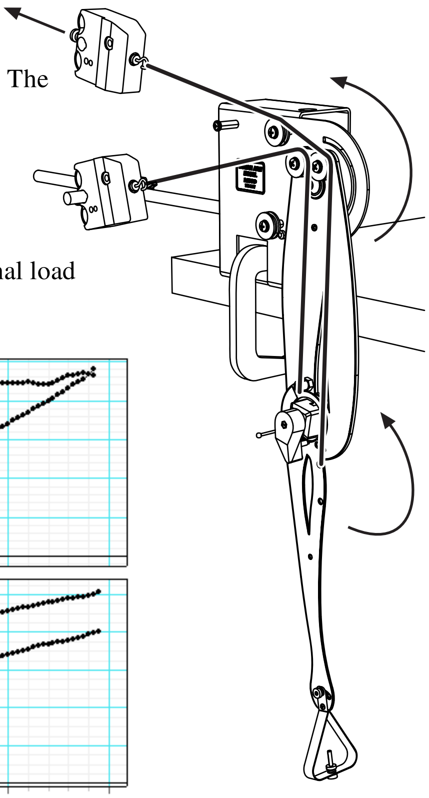

The graph shows data for lifting the 100 g mass.

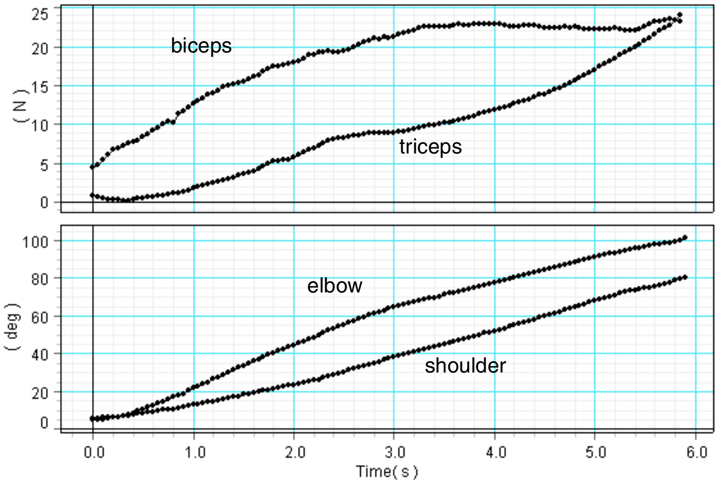

“Passing Lift”

1. Set up the arm model with two force sensors as illustrated. The upper force sensor is attached to the rod clamped to the model’s base. The lower force sensor will be held in your hand.

2. Pull the lower force sensor. The shoulder rotates forward and elbow extends to keep the forearm approximately horizontal.

3. Attach the 100 g mass to the hand and repeat to see how the additional load affects the muscle forces.

The graph shows data for lifting the 100 g mass.

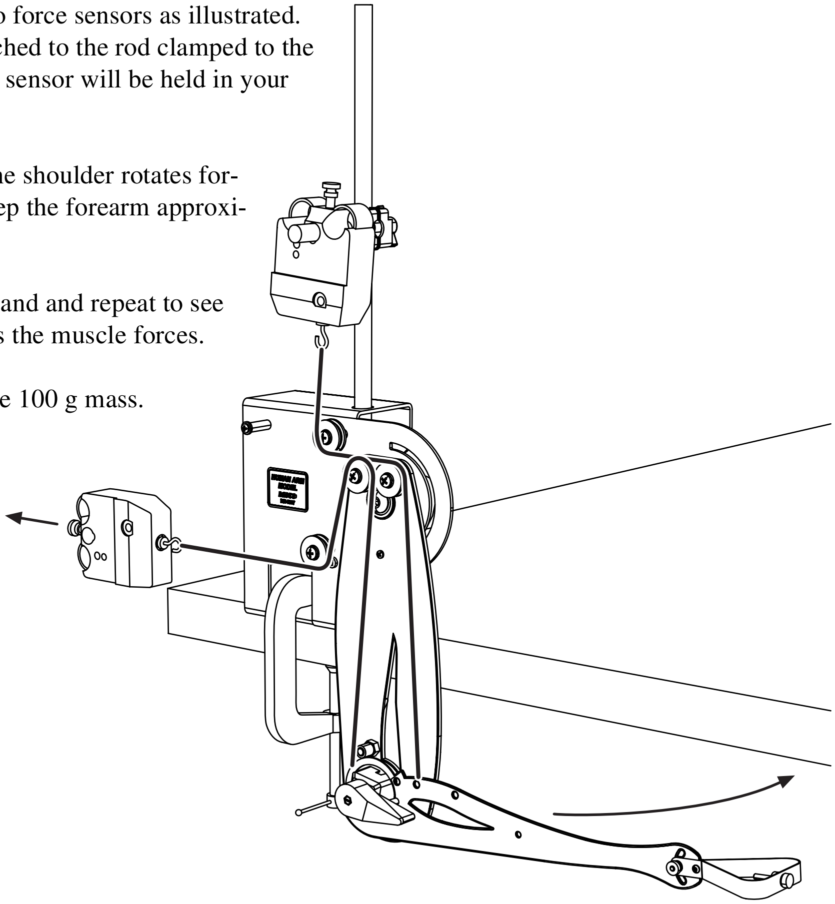

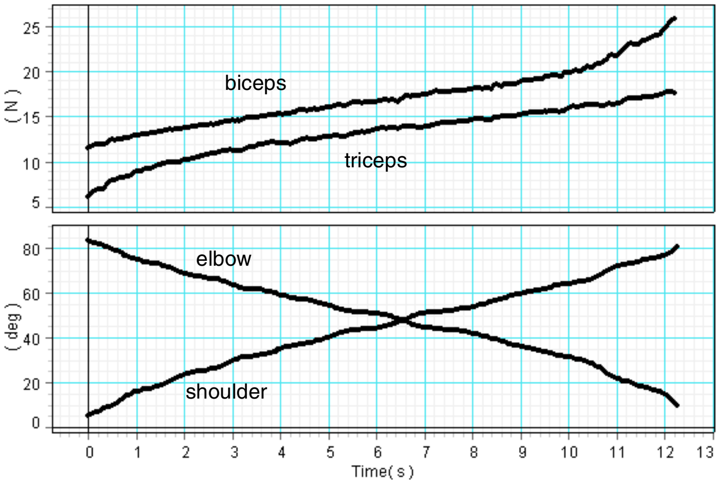

"Free Throw"

When using the arm model to throw a ball (or make any other sudden movement), do not let the parts of the arm crash into the end stops. PASCO recommends the "free throw" as a demonstration performed by an instructor, rather than a student activity.

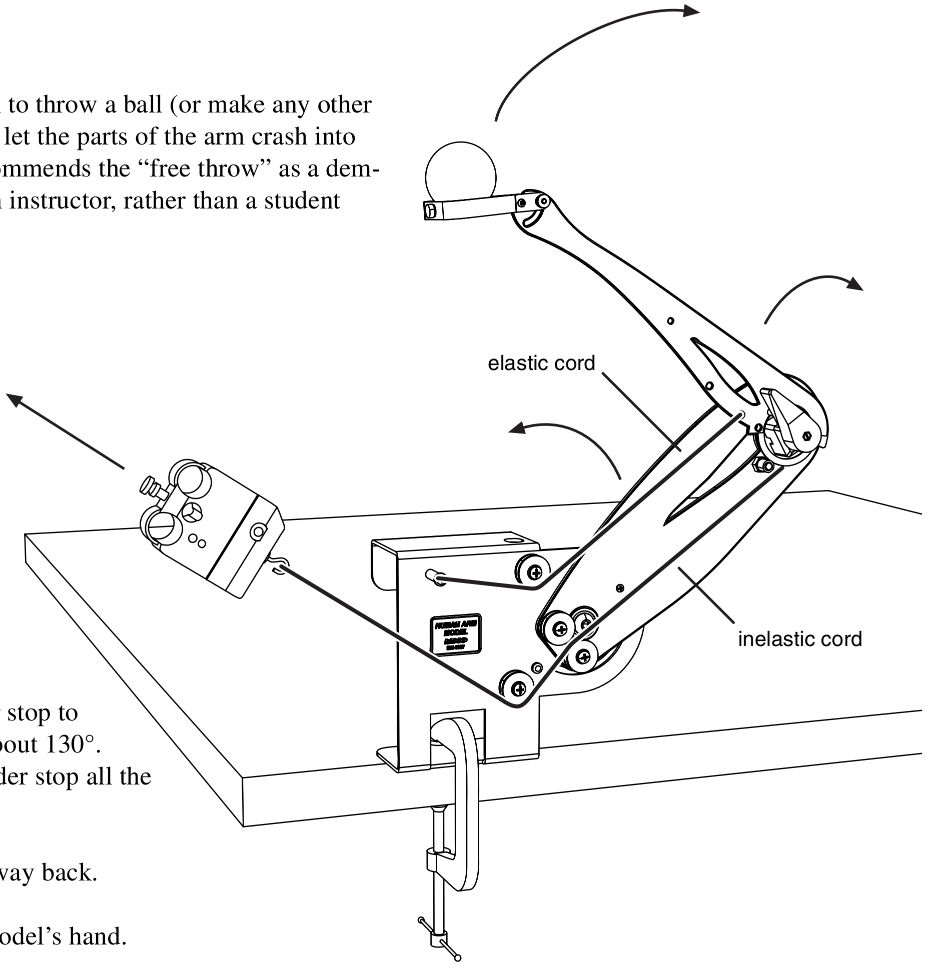

1. Set up the arm model as illustrated. The force sensor will be held in your hand and is connected to the triceps insertion point using standard cord. Elastic cord is connected between the biceps insertion point and the upper shoulder pulley.

2. Set the lower shoulder stop to hold the shoulder at about 130°. Move the upper shoulder stop all the way up.

3. Turn the wrist all the way back.

4. Place the ball in the model's hand.

5. By hand, set the elbow to about 90°; then pull the force sensor to hold it in that position.

6. Pull the force sensor with a swift motion. After the initial pull, maintain tension on the cord and allow the arm to be lowered slowly back to the starting position.

   The shoulder rotates back and elbow extends, tossing the ball up and forward.

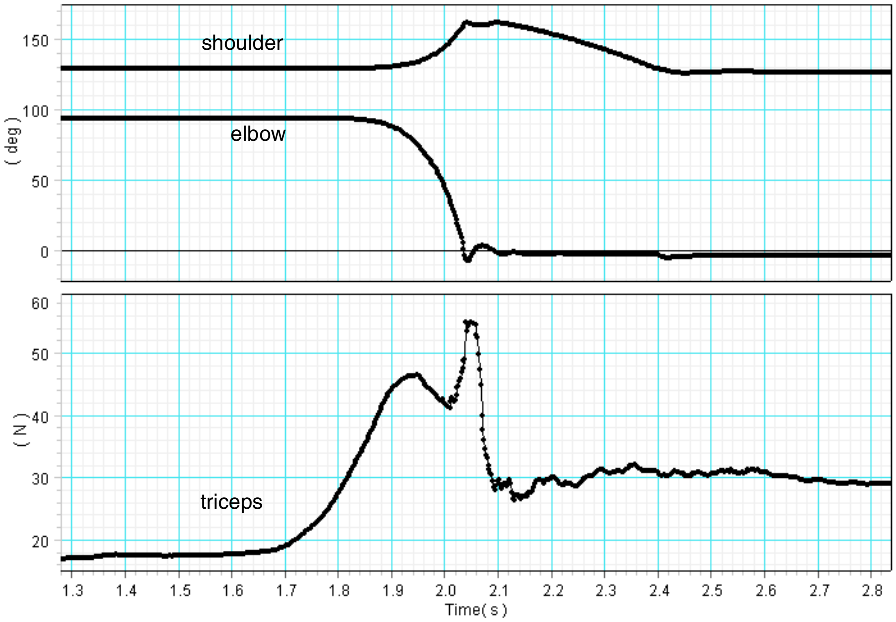

Teacher's Notes

Experiment 1: Biceps Force versus Perpendicular Load

Typical Result:

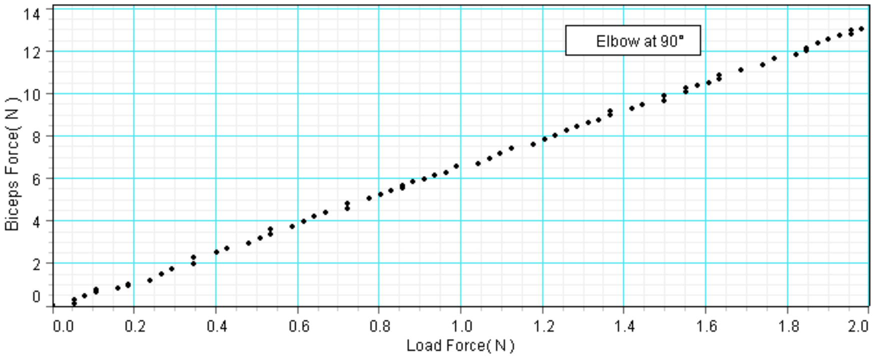

Analysis: **1.** The relationship is approximately proportional with a slope of about 6. **2.** For these typical results, accurate predictions would have been: *(1)* The biceps muscle resists the load. *(2)* The biceps force is greater than the load force. *(3)* For a load of 1 N, the muscle force is approximately 6 N.

Further Analysis:

1. Free-body diagram:

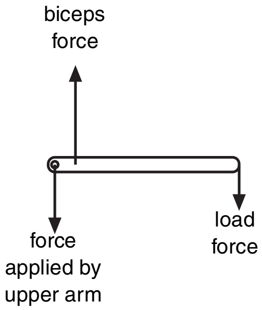

2. The linear acceleration of the forearm is zero; therefore, the net force is zero. **3.** The angular acceleration is zero; therefore, the net torque is zero.

Further Study, typical results:

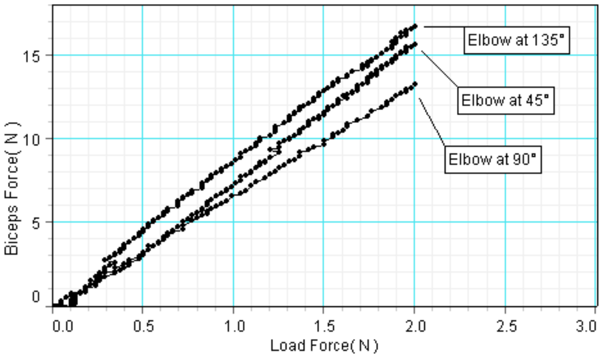

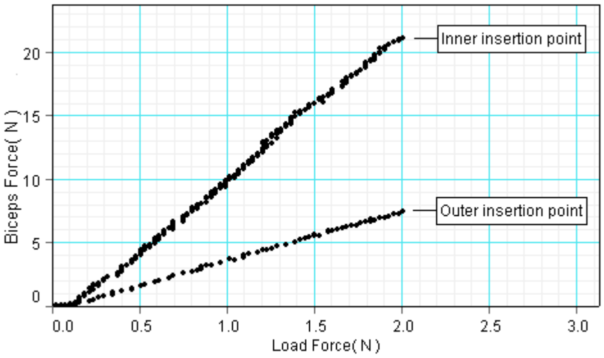

1. The force exerted by the biceps (for a given load) increased for angles greater than or less than 90°. **2.** More biceps force is needed to resisted a load when the muscle is attached at the inner insertion point. Less force is needed when it is attached at the outer insertion point.

Experiment 2: Biceps Force versus Weight

Typical Result:

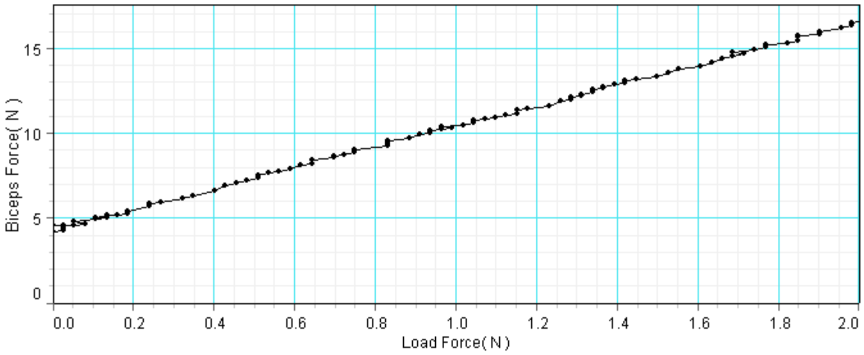

Analysis: **1.** The relationship is linear with a slope of about 6 and a Y-intercept of 4 N. **2.** For these typical results, accurate predictions would have been: *(1)* If the weight applied to the hand is 0.98 N, the biceps force must be about 10 N. *(2)* If the load force doubles, the muscle force does *not* double (because of the intercept). *(3)* When the load force is zero, the biceps force is 4 N. This is the force needed to support the weight of the forearm itself.

Further Analysis:

1. Free-body diagram:

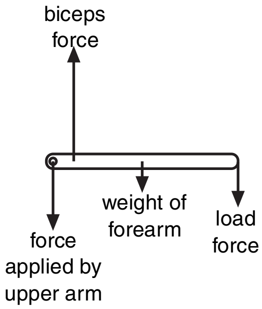

2. The linear acceleration of the forearm is zero; therefore, the net force is zero. **3.** The angular acceleration is zero; therefore, the net torque is zero.

Further Study, typical results: The slope does not change significantly with different elbow angles, but the Y-intercept does change.

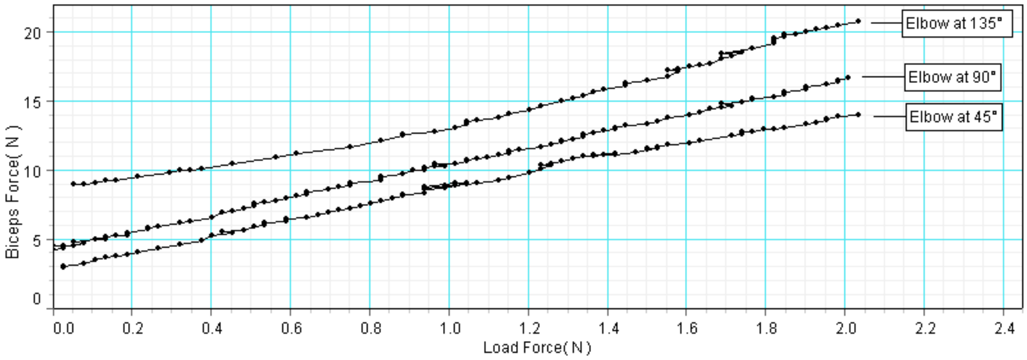

Experiment 3: Triceps Force versus Perpendicular Load

Typical Result:

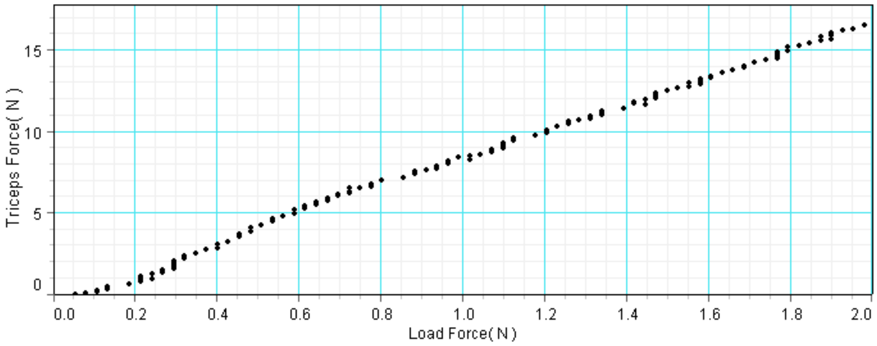

Analysis: **1.** The relationship is approximately proportional with a slope of about 9. **2.** For these typical results, accurate predictions would have been: *(1)* The triceps muscle resists the load. *(2)* The triceps force is greater than the load force. *(3)* For a load of 1 N, the muscle force is approximately 9 N.

Further Analysis:

1. Free-body diagram:

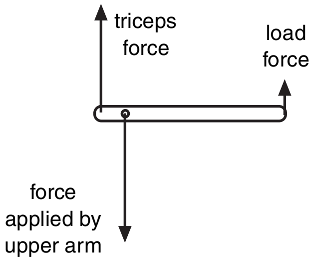

2. The linear acceleration of the forearm is zero; therefore, the net force is zero. **3.** The angular acceleration is zero; therefore, the net torque is zero.

Experiment 4: Biceps Curl

Part A, typical result:

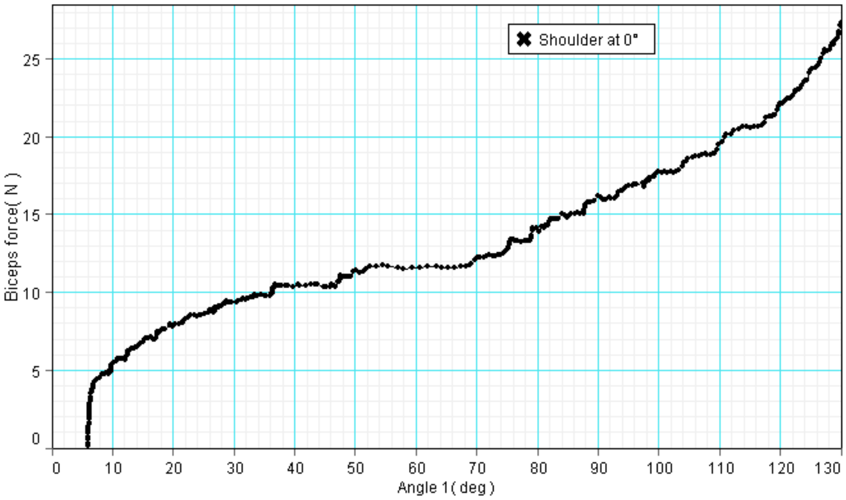

Part A, analysis: **1.** The graph is not linear. **2.** As the elbow flexes, the biceps force increases.

Part B, typical result:

Part B, analysis: **1.** The graph is not linear. **2.** As the elbow flexes, the biceps force decreases.

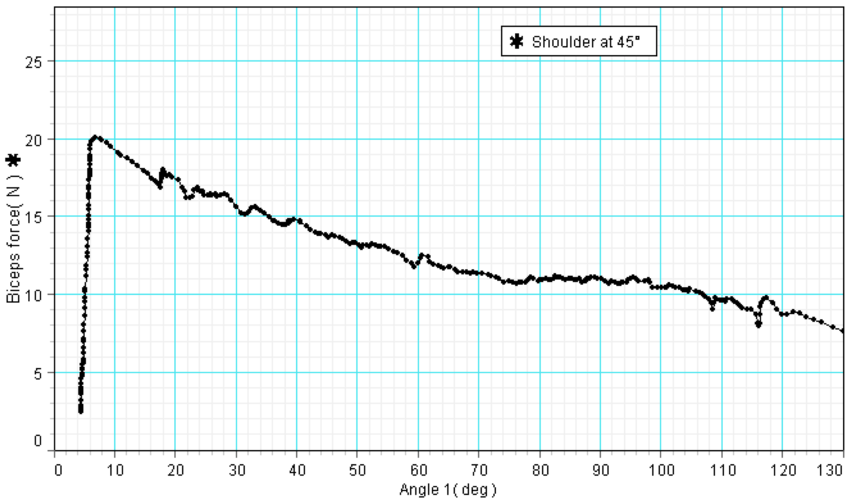

Further Study: The biceps force remains nearly constant when the shoulder is held at about 30°.

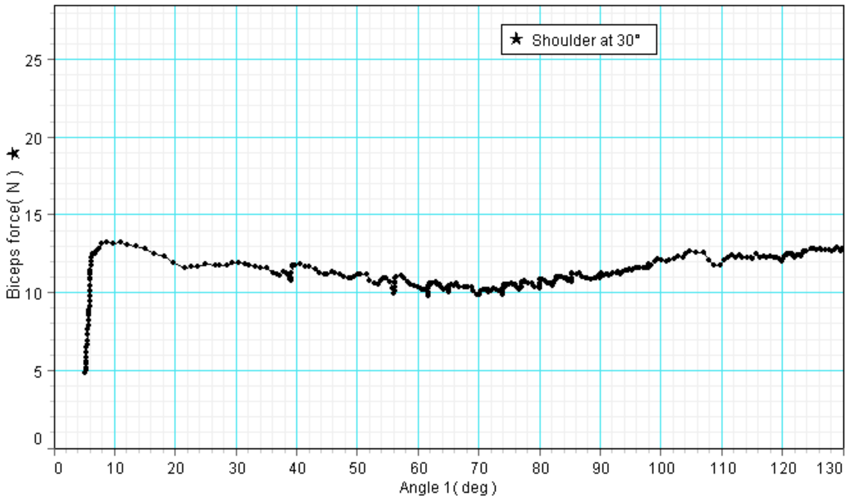

Experiment 5: Biceps Force versus Shoulder Angle, Constant Elbow Angle

Typical Result:

Analysis: **1.** The graph is not linear. **2.** As the arm lifts the mass, the biceps force decreases.

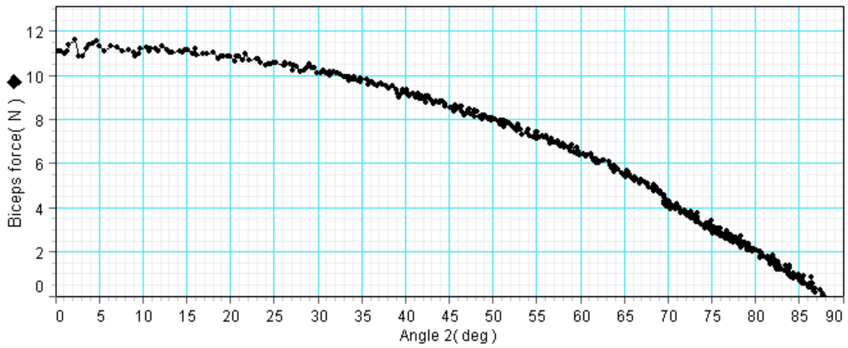

Experiment 6: Biceps Force versus Elbow Angle, Constant Forearm Orientation

Typical Result:

Analysis: **1.** As the arm pushes the mass forward, the elbow angle decreases (from right-to-left on the graph). **2.** The biceps force increases.

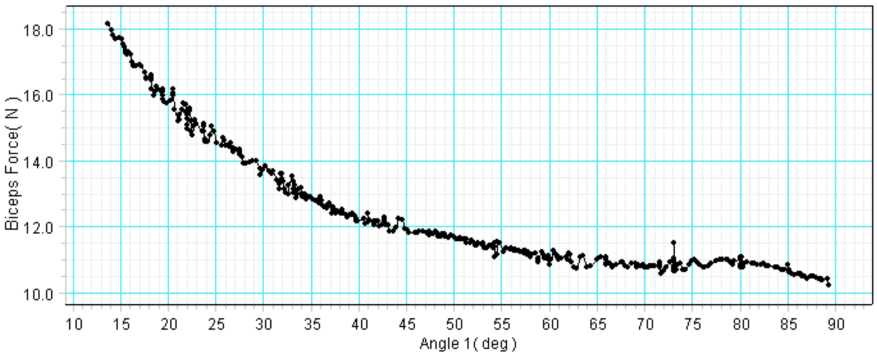

Experiment 7: Triceps Extension

Typical Results:

Part A, analysis: **1.** As the arm lifts the mass, the elbow angle decreases. **2.** The triceps force decreases (from right-to-left on the graph).

Part B, analysis: The elbow makes the same motion as in Part A; however, in this graph, the triceps force increases as the arm lifts the mass.

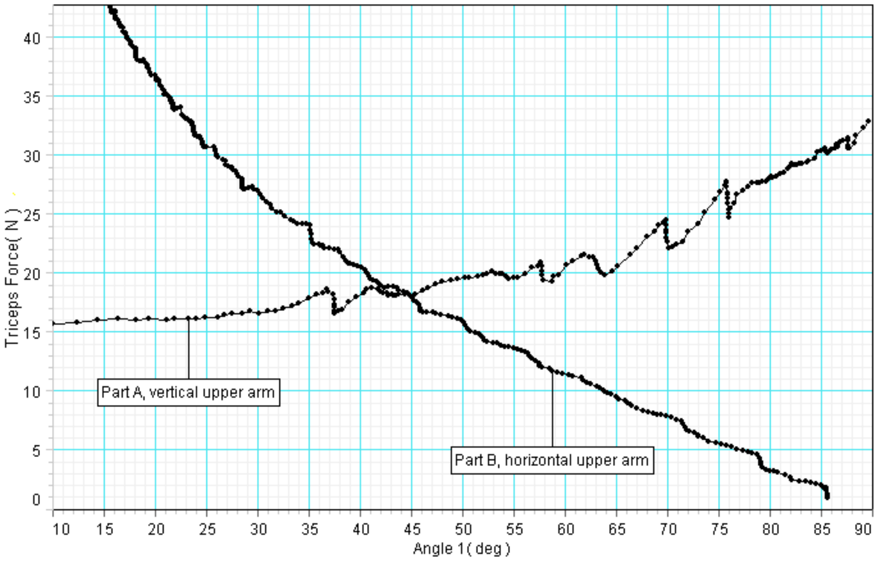

Experiment 8: Rotational Inertia of the Forearm

Part A, typical result:

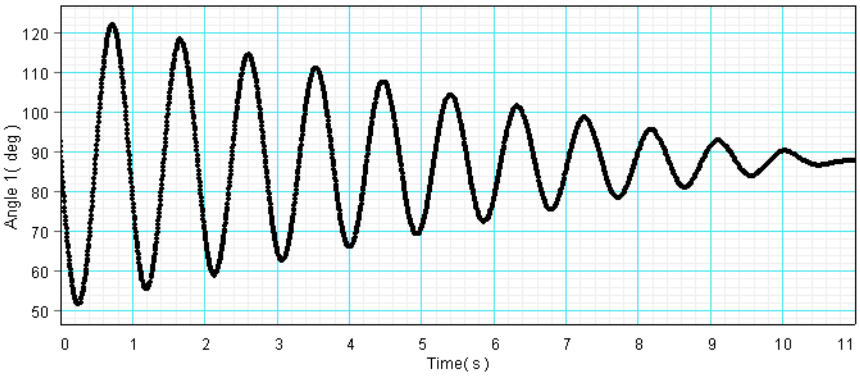

Part A, analysis:

$T = 0.93$ s

$I = 0.0030$ kg m^2

Part B, typical result:

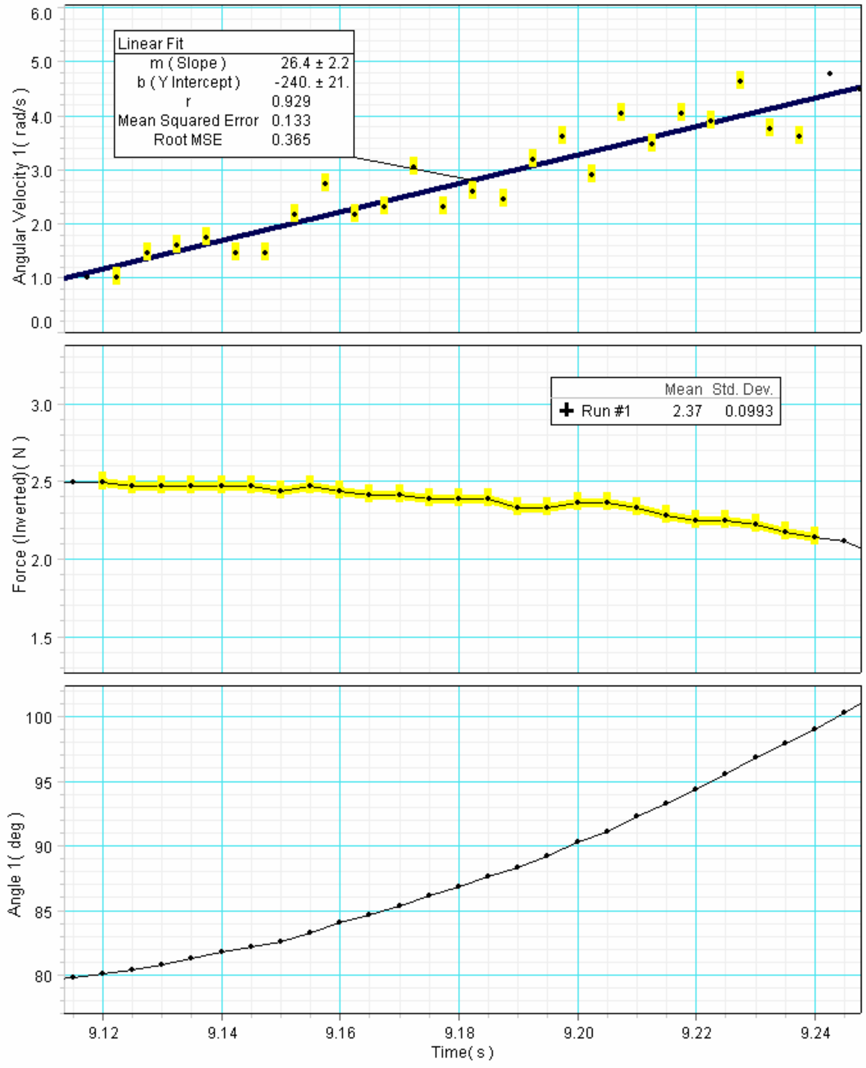

Part B, analysis:

F = 2.4 N

slope = α =26 rad/s^2

$I = 0.0042$ kg m^2

Technical Support

For assistance with any PASCO product, contact PASCO at:

Address: PASCO scientific
10101 Foothills Blvd.
Roseville, CA 95747-7100

Phone: 916-786-3800 (worldwide)
800-772-8700 (U.S.)

Fax: (916) 786-7565

Web: www.pasco.com

Email: support@pasco.com

Limited Warranty
For a description of the product warranty, see the PASCO catalog.

Copyright

Trademarks